AdComp Processing Technology Pvt. Ltd.
Plot No. 350 & 351, Atmiya-2 Industrial Park,
Block No. 282, NH-48, Bamangam & Manglej,
Karjan, Vadodara – 391240, Gujarat, India

T +91 9730 228 057
F +91 950 3558 057
I www.rotecgrp.in

ROTEC
By AdComp Processing India

Rotec SMC Block Flange

Drilling Standard: ANSI B16.5 Class 150

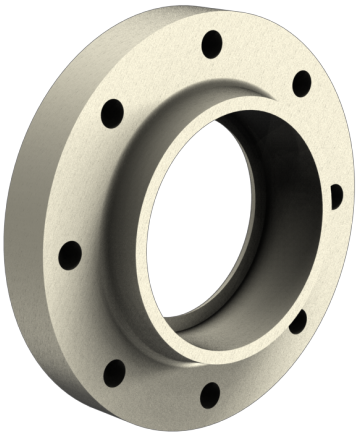

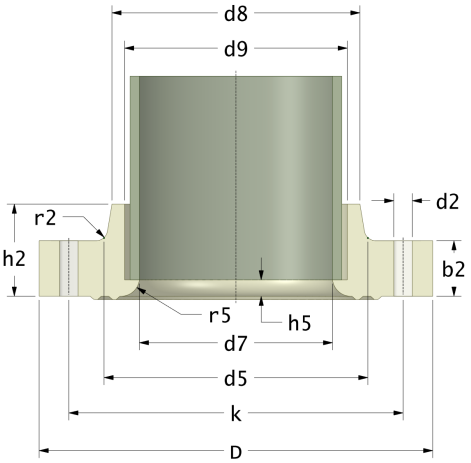

#	DN (mm)	Pmax (bar)	D (mm)	d7 (mm)	d9 (mm)	d8 (mm)	d5 (mm)	r2 (mm)	r5 (mm)	h5 (mm)	k (mm)	Holes (no.)	d2 (mm)	h2 (mm)	b2 (mm)	Article Number
1	25	16	116	26	30	45	47	4	3	6	79	4	16	30	30	FFP-25-30-16/150
2	32	16	140	33	38	67	69	4	3	6	89	4	16	30	30	FFP-32-38-16/150
3	40	16	140	41	46	75	77	5	3	6	98	4	16	30	30	FFP-40-46-16/150
4	50	16	164	51	56	85	87	5	3	6	121	4	19	35	35	FFP-50-56-16/150
5	65	16	184	66	72	100	102	5	3	6	140	4	19	35	35	FFP-65-72-16/150
6	80	16	200	81	88	118	122	6	3	6	152	4	19	38	38	FFP-80-88-16/150
7	80	16	200	92	99	118	122	6	3	6	152	4	19	38	38	FFP-81-99-16/150
8	100	16	228	101	108	138	142	6	3	6	190	8	19	42	42	FFP-100-108-16/150
9	100	16	228	112	119	138	142	6	3	6	190	8	19	42	42	FFP-101-119-16/150
10	125	16	254	138	146	160	167	8	3	6	216	8	22	46	46	FFP-126-146-16/150
11	125	16	254	126	134	160	167	8	3	6	216	8	22	46	46	FFP-125-134-16/150
12	150	10	284	151	160	180	188	8	3	10	241	8	22	48	40	FFP-150-160-10/150
13	150	10	284	162	171	180	188	8	3	10	241	8	22	48	40	FFP-151-171-10/150
14	150	16	284	151	160	180	188	8	3	10	241	8	22	60	52	FFP-150-160-16/150
15	150	16	284	162	171	180	188	8	3	10	241	8	22	60	52	FFP-151-171-16/150
16	200	10	342	202	212	234	248	8	3	10	299	8	22	52	42	FFP-200-212-10/150
17	200	10	342	212	222	234	248	8	3	10	299	8	22	52	42	FFP-201-222-10/150
18	200	16	342	202	212	234	248	8	3	10	299	8	22	66	56	FFP-200-212-16/150
19	200	16	342	212	222	234	248	8	3	10	299	8	22	66	56	FFP-201-222-16/150

Disclaimer
Whilst every care is taken to ensure that the information on this website is complete and accurate, AdComp Processing Technology Pvt. Ltd. India cannot accept responsibility for any omissions or inaccuracies or for any consequences arising therefrom. By using this website, the user accepts the terms of this disclaimer.
07-02-2023

AdComp Processing Technology Pvt. Ltd.
Plot No. 350 & 351, Atmiya-2 Industrial Park,
Block No. 282, NH-48, Bamangam & Manglej,
Karjan, Vadodara – 391240, Gujarat, India

T +91 9730 228 057
F +91 950 3558 057
I www.rotecgrp.in

ROTEC
By AdComp Processing India

Rotec SMC Block Flange

Drilling Standard: ANSI B16.5 Class 150

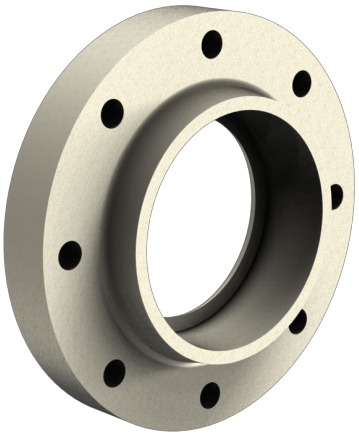

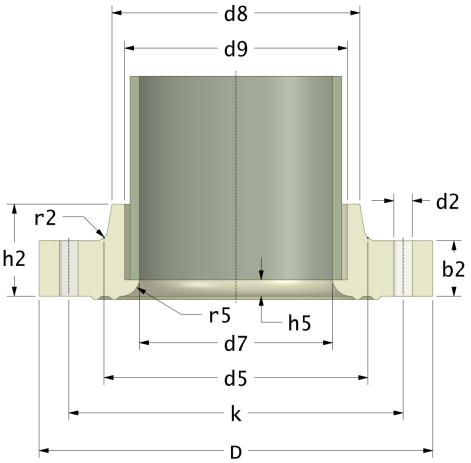

#	DN (mm)	Pmax (bar)	D (mm)	d7 (mm)	d9 (mm)	d8 (mm)	d5 (mm)	r2 (mm)	r5 (mm)	h5 (mm)	k (mm)	Holes (no.)	d2 (mm)	h2 (mm)	b2 (mm)	Article Number
20	250	10	405	252	262	288	300	10	3	10	362	12	25	58	45	FFP-250-262-10/150
21	250	10	405	262	274	288	300	10	3	10	362	12	25	58	45	FFP-251-274-10/150
22	300	10	485	302	314	346	368	10	3	10	432	12	25	67	51	FFP-300-314-10/150
23	300	10	485	313	326	346	368	10	3	10	432	12	25	67	51	FFP-301-326-10/150

Disclaimer
Whilst every care is taken to ensure that the information on this website is complete and accurate, AdComp Processing Technology Pvt. Ltd. India cannot accept responsibility for any omissions or inaccuracies or for any consequences arising therefrom. By using this website, the user accepts the terms of this disclaimer.
07-02-2023